Single Phase Power Meter,With Internal CT

Description

The Single Phase Power Meter with internal CT are solid state transducers for measuring the current and voltage of fans, pumps, and other HVAC equipment. The current sensors are available in two types for either AC @ 200A or DC @ 100A applications. The connections are by Modbus.

Specifications

	SPM1-AC	SPM1-DC
Power supply voltage	12V-24V AC/DC	
Power Consumption	20mA@24VDC	
Voltage Range	0-260V(±0.5V)	0-480V (±0.5V)
Current Range	0-200A (±1.0A)	0-100A (±1.0A)
Frequency	50hz/60hz	
Net	Modbus RS485	
Operating Temp	-15°C-60°C	

Part Number Scheme

SPM1 - 50-AC-E

Code	Description
SPM1	Single Phase Power Meter, with internal CT

Code	Maximum Current
50	50A
100	100A
200	200A

Code	Primary Current
E	Single Phase Power Meter, with external CT

Code	Primary Current
AC	AC Current
DC	DC Current

Single Phase Power Meter,With Internal CT

Dimension

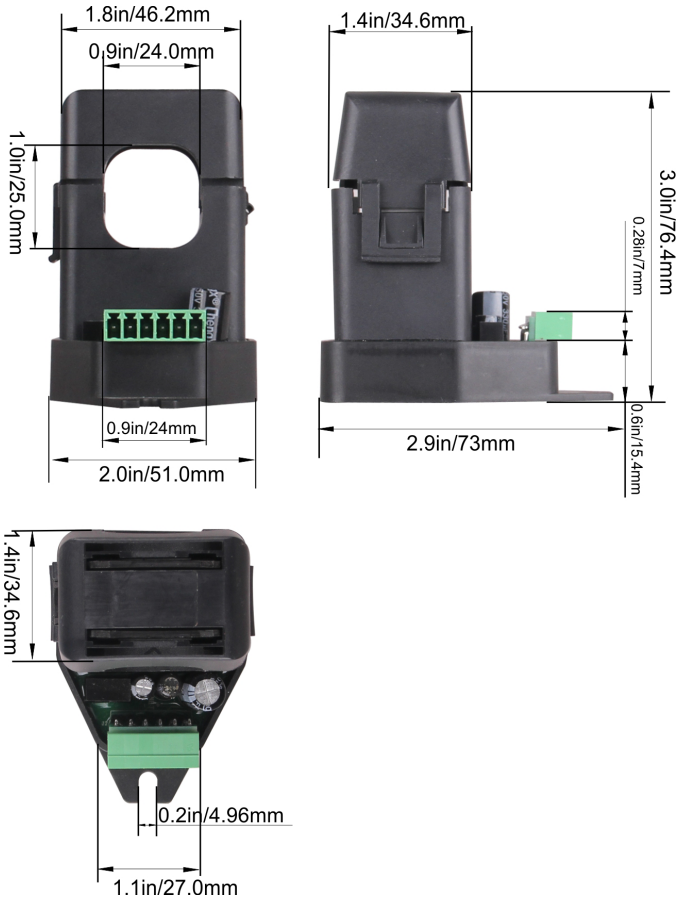

Wiring Diagram

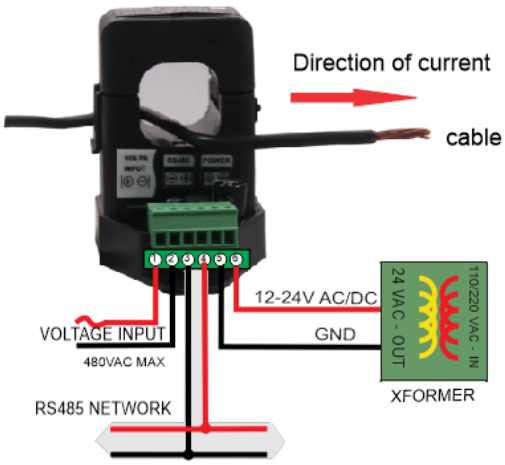

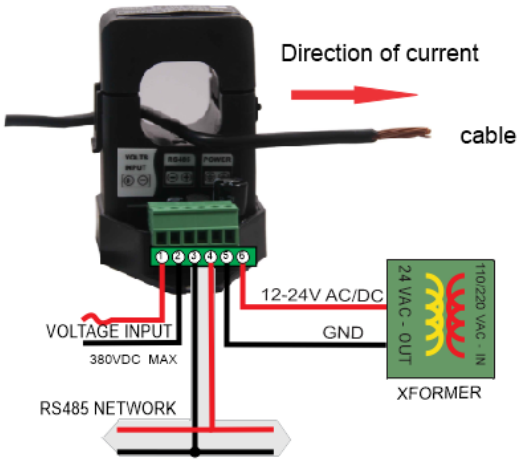

Single Phase Power Meter,With Internal CT

AC Current/Voltage Test

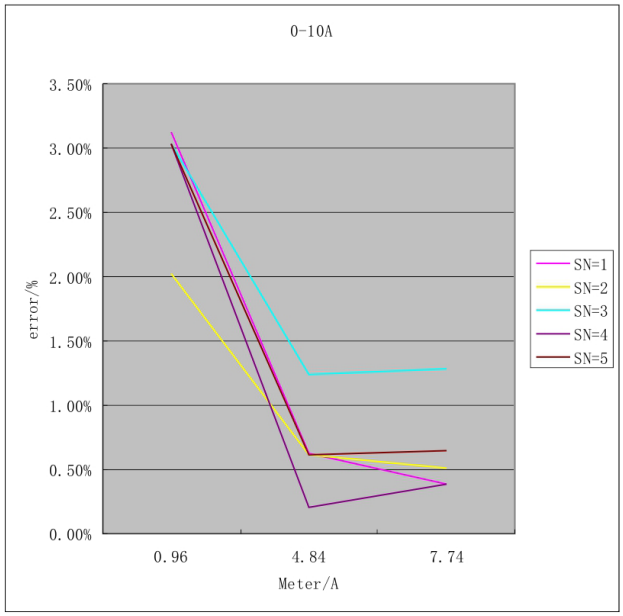

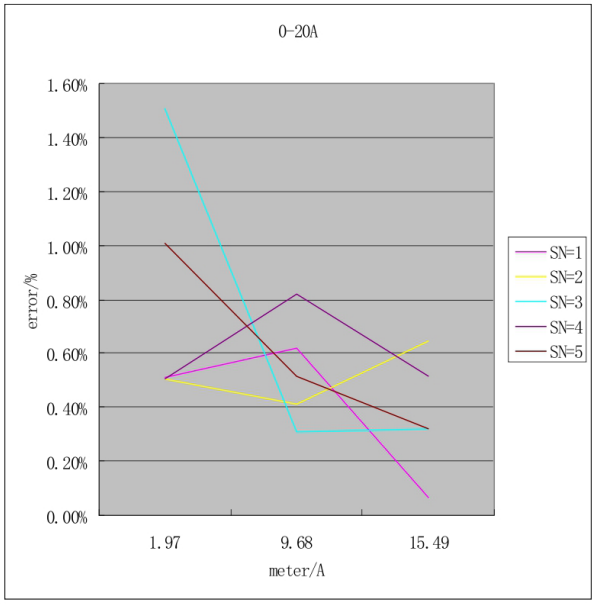

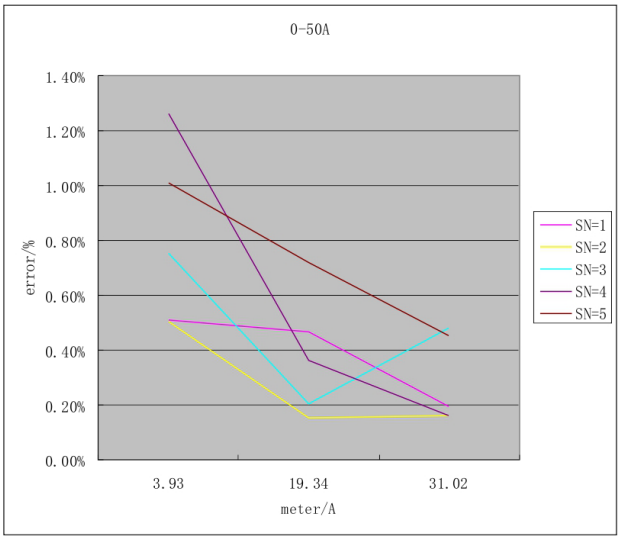

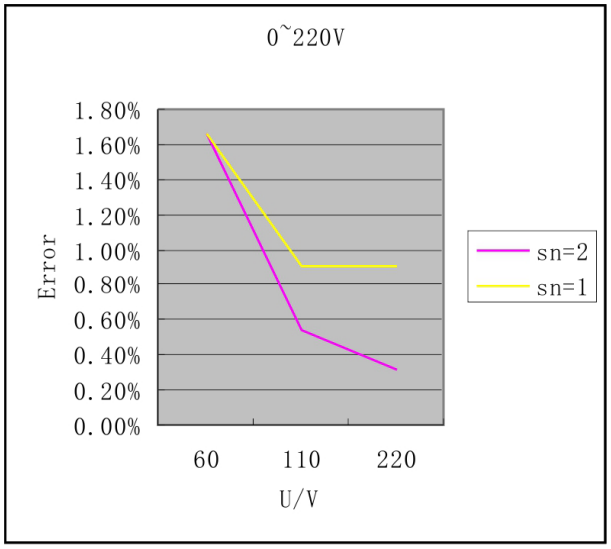

Single Phase Power Meter,With Internal CT

Calibration

Calibrate current	Write the real value to register 100
Calibrate the voltage	Write the real value to register 101

Set Analog Output

1.Set the output mode (auto mode):Write 0 to register 143.
2.Select current or voltage value for the analog output,Set register 142(0: current. 1 : voltage)
3.Use register 145 to set the current range or register 146 to set the voltage range
4.I f you set 0 to register 142,the analog output value = current value (reg100)/100 / current range (reg145)*5V (AC)
e. g. : Range = 100A, Current Value = 10A, DA = 10/100*5 = 0. 5V the analog output value = cur rent value (reg100)/10 / current range (reg145)*5V (DC) I f set 1 to register 142 then,analog output value = voltage value (reg101)/10 / current range (reg146)*5V
e. g. : Range = 1000V, Voltage Value = 200V, DA = 200/1000*5 = 1 V

Single Phase Power Meter,With Internal CT

Register List

Address	Bytes	Range	Operation info	Register and Description	Note
0 ~ 3	4	-	W/R	Serial Number -4 byte value.	
4 ~ 5	2	-	R	Software Version –2 byte value.	
6	1	0-255	R/W	ADDRESS. Modbus device address	default 1
7	1	0-255	W/R	Product Model.	
8	1	0-255	W/R	Hardware Revision.	
100	2	AC:0-50A DC:0-100A	W/R	The current sensor reading, calibrated value	AC:eg.102 is 1.02A(0.01A) DC:eg.102 is 10.2A(0.1A)
101	2	AC:0-260V DC:0-380V	W/R	The voltage sensor reading, calibrated value.	eg.1102 is 110.2V(0.1V)
103	1	0-1	R/W	Output BUS Selected	0:RS485. 1:one wire
104	1	0-10	R/W	the range of current	Full Scale Amps Setting 0 = 10A 1 = 20A 2 = 50A 3 = 100A

Single Phase Power Meter,With Internal CT

calibrate the voltage of sensor					
121	2	0~3800	R/W	1st calibration voltage target value	when calibrate,need to set R139=11 and R140=22.
122	2		R	1st calibration voltage original value	
123	2	0~3800	R/W	2nd calibration voltage target value	
124	2		R	2nd calibration voltage originall value	
125	2	0~3800	R/W	3rd calibration voltage target value	
126	2		R	3rd calibration voltage original value	
127	2	0~3800	R/W	4th calibration voltage target value	
128	2		R	4th calibration voltage original value	
129	2	0~3800	R/W	5th calibration voltage target value	
130	2		R	5th calibration voltage origianl value	
calibrate the AC current of sensor					
131	2	0~5000	R	the rate of calibrate(0-10A)	you can write the real value to Register100 to calibrate the AC current
132	2	0~5000	R	the rate of calibrate(0-20A)	
133	2	0~5000	R	the rate of calibrate(0-50A)	
Offset set					
134	2		R/W	the offset of current(DC)	
135	2		R/W	the offset of voltage	
filter set					
136	1	0~10	R/W	the filter of current	
137	1	0~10	R/W	the filter of voltage	
lock set					
139	1	0-255	R/W	lock_x,when lockx =11 and lock_y=22,we can calibrate sensor	
140	1	0-255	R/W	lock_y	
Baud Rate set					
141	0	0-1	R/W	Baud Rate set	0:19200.1:9600
Anolog Output set					
142	1	0-1	R/W	current or voltage output set	0:current.1:voltage
143	1	0-1	R/W	OutMode set	0:auto.1:manual
144	2	0-65535	R/W	the manual input value	
145	2	0-65535	R/W	the range of current set for anolog output	A
146	2	0-65535	R/W	the range of voltage set for anolog output	V